Cut out in the right size:
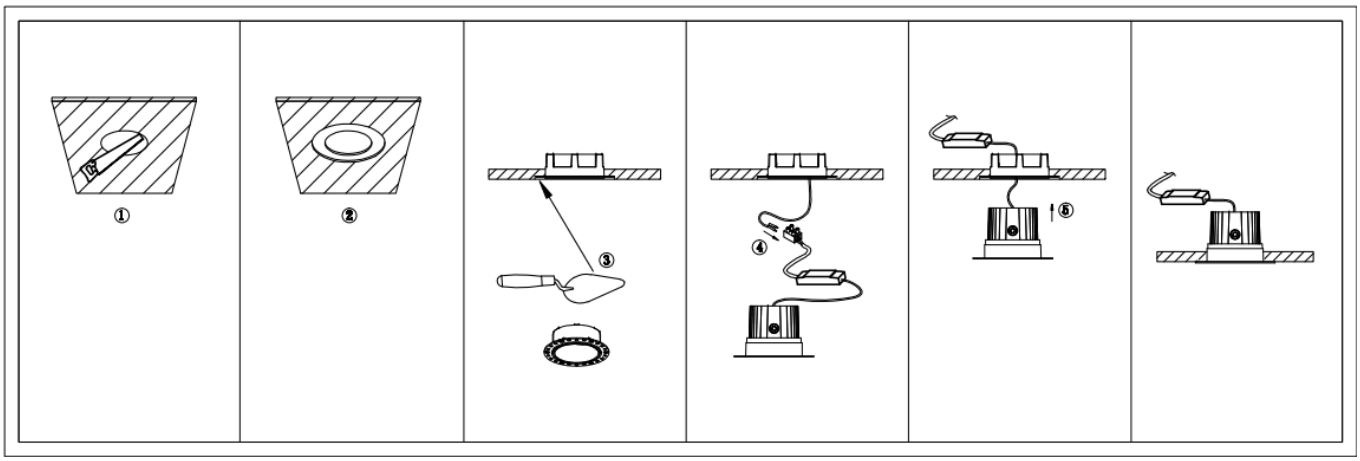
| | |
|---|---|
| 86.D059.1***.** | 80mm |
| 86.D059.2***.** | 100mm |
| 86.D059.3***.** | 110mm |
| 86.D059.4***.** | 135mm |